moooi©

# Container Oval

A new versatile family member enters the Container Table series by Marcel Wanders. Available in the same materials & colours as its sibling, it combines soft, rounded shapes with a slender body: a dream of many. Find the perfect Container Table Oval for your needs or those of your home, working area or public space.

| | |
|---|---|
| **Designer** | Marcel Wanders |
| **Year of design** | 2013 |
| **Material** | Oak Veneer (only available in oak) |
| **Additional** | The feet should be filled with sand to create extra stability |

# mooo i©

## technical

All Container table tops all attach to the container foot in the same way. The Container concept is that sand can be added to the foot to give it strength and stability. Water must always be treated with an anti-algae additive to prevent the water from becoming stale. There are Hex-bolts on the underside of each table which align with equally spaced holes in the mounting disk.

Maximum divided load per $m^2$ = 100kg

## wood stained

Oak veneer, stained in 5 different colours

Black Stained

Wenge Stained

White Washed

Cinnamon Stained

Natural Lacquer

## Wood Lacquered

Oak veneer, lacquered in 4 different RAL colours

RAL 2004
Lacquered

RAL 3020
Lacquered

RAL 9005
Laquered

RAL 9016
Lacquered

## packaging

**Conainer Oval 210 top:**

H 217 cm | 85.4"
W 148 cm | 58.3"
D 10 cm | 3,9"

Colli 1/1
Product weight:
KG | lb
With packaging:
KG | lb

**Conainer Oval 260 top:**

H 266 cm | 104,7"
W 177 cm | 69,7"
D 8 cm | 3,1"

Colli 1/1
Product weight:
68 KG | 149,9 lb
With packaging:
70 KG | 154,3 lb

## cleaning instructions

Moooi recommends using a good furniture polish and a soft cloth. Apply generously in layers to the surface and use the cloth to shine. Do not use abraisive fabrics, gently remove tough stains with warm water and a trusted multi-surface cleaner.

# moooi

## dimensions

**Container Oval 260**

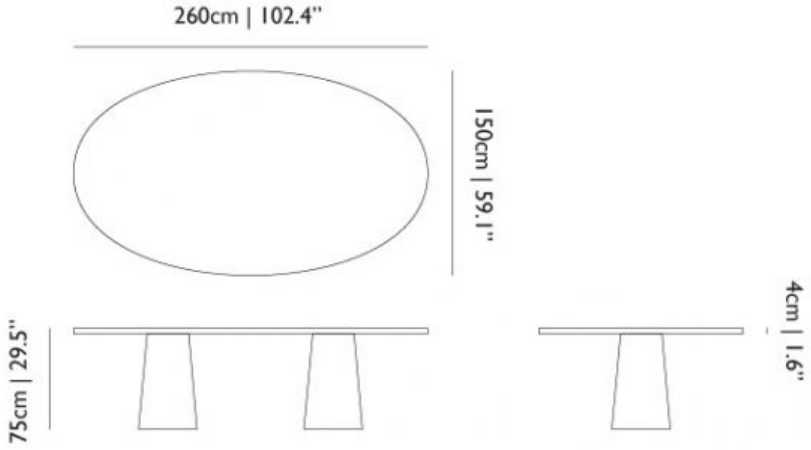


Fits on:

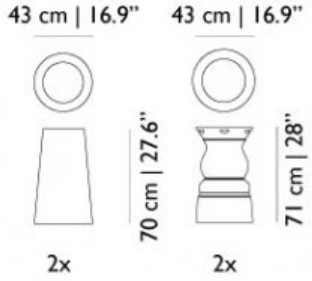


**Container Oval 210**

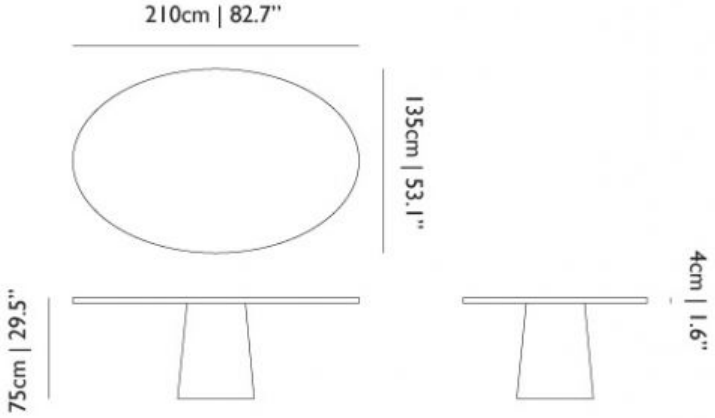

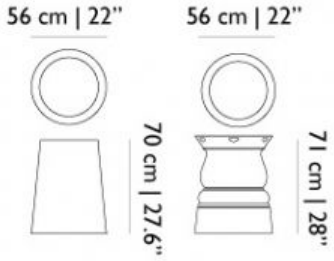
Fits on: